Roland

Perfekte Sound-Systeme.

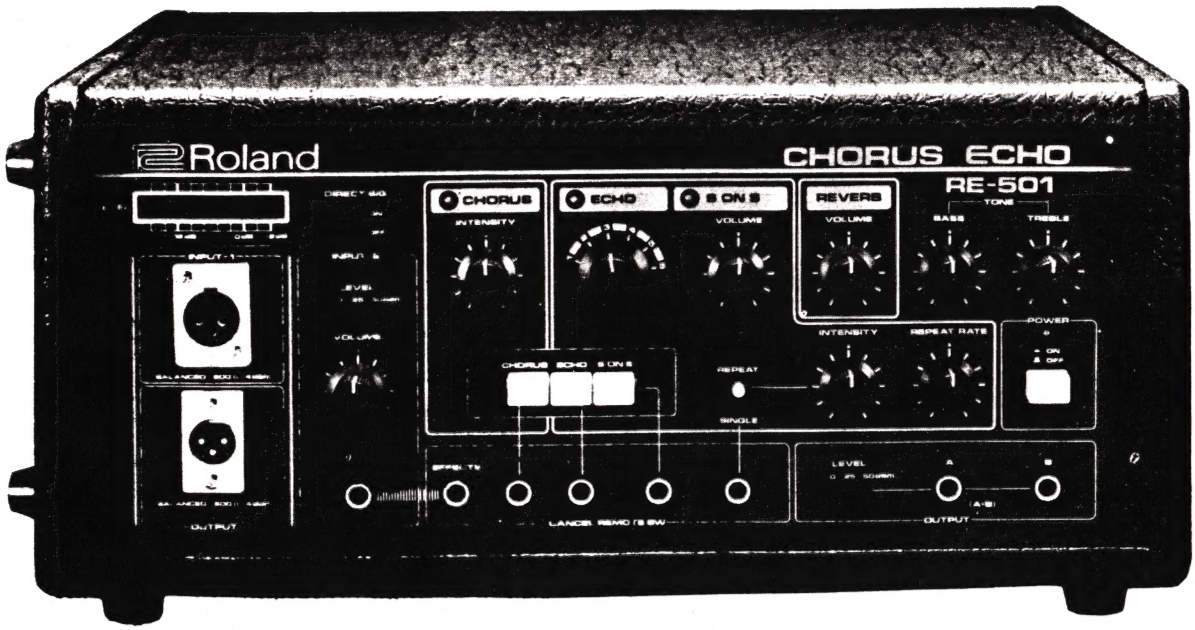

RE-501

CHORUS ECHO

Bezeichnungen und Funktion der Bedienungselemente

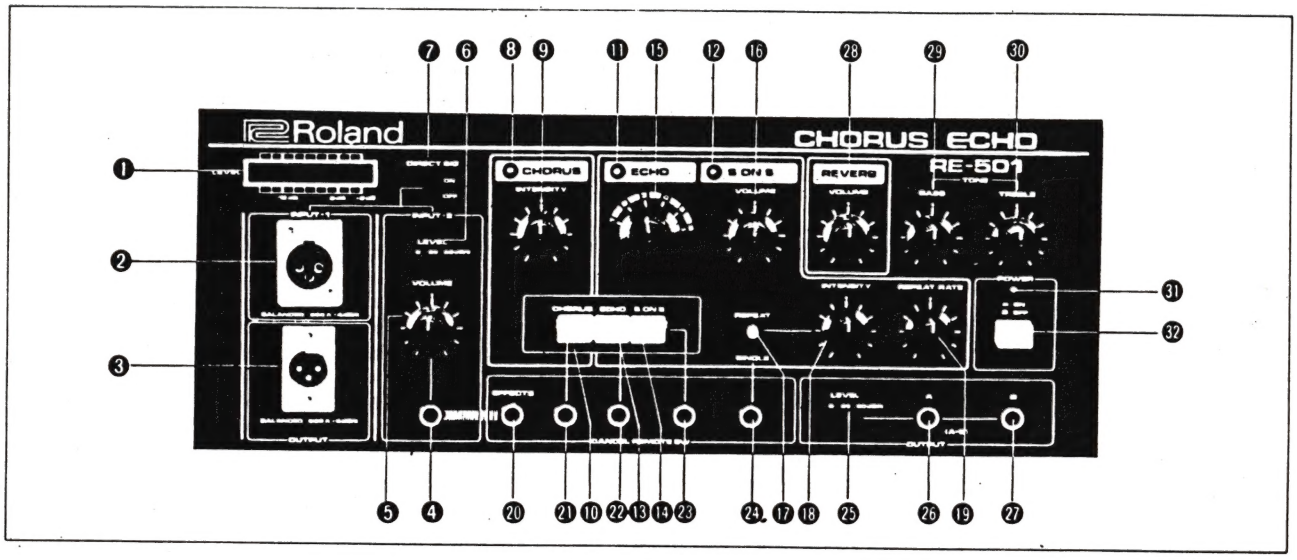

1. LED Aussteuerungsanzeige

   Regeln Sie den Eingang so, daß die LED-Kette O dB anzeigt und die Spitzen bei max + 2 dB liegen.

2. Symmetrischer Eingang (XLR - 600 Ohm)

   Der "Volume"-Regler hat keinen Einfluß auf diesen Eingang.

   Bei einem + 4-dBm-Eingang zeigt die LED-Kette O dB.

3. Symmetrischer Ausgang (XLR - 600 Ohm)

   Wenn die LED-Kette O dB anzeigt, besitzt das Ausgangssignal + 4 dB.

   Auf diesem Ausgang liegen alle Effekte des RE-501 zusammengefaßt (A + B).

4. Unsymmetrischer Eingang (Klinke)

   Direkteingang für Mikrofon, Gitarre oder Keyboards

5. "VOLUME"

   Lautstärkekontrolle für den unsymmetrischen Eingang

6. Eingangsanpassungsschalter für Klinkeneingang

Mikrofon	- 50 dBm	Gitarre	- 25 dBm
Synthesizer	0 dBm	Mixer	0 oder - 25 dBm

7. Schalter Direktsignal ein/aus

   Wenn Sie das RE-501 in ein Mischpult einschleifen, schalten Sie das Direktsignal aus (off). Bei Betrieb zwischen Instrument und Verstärker schalten Sie das Direktsignal ein (on).

8. CHORUS LED

   Die LED leuchtet, wenn der Choruseffekt eingeschaltet ist.

9. CHORUS-Tiefe-Kontrolle

   Mit diesem Regler bestimmen Sie die Stärke des Choruseffektes.

10. CHORUS-Ein/Aus-Schalter

11. ECHO LED

    Die LED leuchtet, wenn Echo eingeschaltet ist.

12. S ON S LED

    Die LED leuchtet, wenn der "Sound on Sound"-Effekt eingeschaltet ist.

13. ECHO-Ein/Aus-Schalter

14. "S ON S"-Ein/Aus-Schalter

15. Echoarten-Wiedergabekopfkombinationen

	1	2	3	4	5	6
Tonkopf 1	X			X		X
" 2		X		X	X	X
" 3			X		X	X

16. "ECHO"- und "S ON S"-Lautstärke

Der "Volume"-Regler bestimmt die Lautstärke von Echo und "S on S", hat aber keinen Einfluß auf das Direktsignal.

17. Schalter Einfachwiederholung (SINGLE/REPEAT)

Mit diesem Schalter sperren Sie die Rückführung auf den Aufspielkopf. Das bedeutet, jeder Wiedergabekopf gibt nur einmal ein Einfachecho ab. Je nach Echoart können Sie so 1fach-, 2fach- oder 3fach-Wiederholungen erzielen. Der Schalter wirkt auch auf den "S on S"-Effekt.

18. INTENSITY (Wiederholungshäufigkeit)

Der Regler bestimmt die Rückführung auf den Eingang (Feedback). Je mehr er im Uhrzeigersinn gedreht wird, umso mehr Echowiederholungen finden statt (wirkt nur, wenn der Schalter "single/repeat"auf "repeat" steht). Beachten Sie, daß sich bei zu starkem Feedback das Signal selber aufschaukelt und das zu einer Zerstörung der Elektronik führen kann.

19. REPEAT RATE - Wiederholungsgeschwindigkeit

Der Regler kontrolliert die Geschwindigkeit des Bandes und damit die Zeit zwischen den Echo- bzw. "S on S"-Wiederholungen.

20. - 24. Fußschalteranschlüsse

Über diese Anschlüsse können mit Hilfe der Fußschalter FS-1, FS-2 oder FS-3 alle Funktionen des RE-501 ferngesteuert werden.

25. Ausgangsanpassungsschalter (für die Klinkenausgänge)

Gitarrenverstärker	- 25 dBm
Gesangsverstärker	- 50 dBm
Mischpult	0 oder - 25 dBm

26. Ausgang A

Wenn Ausgang B nicht genutzt wird, so liegen alle Effekte auf diesem Anschluß (A + B).

27. Ausgang B

In Verbindung mit einem Anschluß an A entsteht eine stereophone Zuordnung der Effekte.

28. Hall-Lautstärke

Allen Effekten kann mit dem Regler "Reverb Volume" ein Halleffekt zugemischt werden.

29. Klangkontrolle Bass (beeinflußt Effektsignale)

30. Klangkontrolle Höhen (beeinflußt Effektsignale)

31. NETZ LED

leuchtet, wenn das Gerät eingeschaltet ist.

32. Netzschalter

Eingänge und Ausgänge

Die Ein- und Ausgänge (symmetrisch und unsymmetrisch) können in beliebiger Kombination genutzt werden.

Der symmetrische und unsymmetrische Eingang wird intern gemischt, so daß sie parallel genutzt werden können.

Auch die symmetrischen und unsymmetrischen Ausgänge können parallel genutzt werden.

RE-501, SRE-555 SERVICE NOTES

SPECIFICATIONS

Input Level/Impedance

Balanced:	+4dBm/30kΩ
Unbalanced:	0dBm/47kΩ
	−25dBm/220KΩ
	−50dBm/6.6KΩ

Output Level/Impedance

Balanced:	+4dBm/600Ω
Unbalanced:	0dBm/More than 5KΩ
	−25dBm/More than 5KΩ
	−50dBm/More than 5KΩ

Switch
Input-2-Level Switch (0, −25, −50dBm)
Output A·B Level Switch (0, −25, −50dBm)

SRE-555

Power Consumption: 24W
Dimension: 480(W)×180(H)×450~735(D)mm
Weight: 15.8kg

RE-501

Power Consumption:	24W
Dimensions :	418(W)×190(H)×330(D)mm
Weight:	10.5Kg

CABINET DISASSEMBLY: Remove screws - two decorations on both sides; eight 4 x 25mm truss (6 bottom, 2 sides).

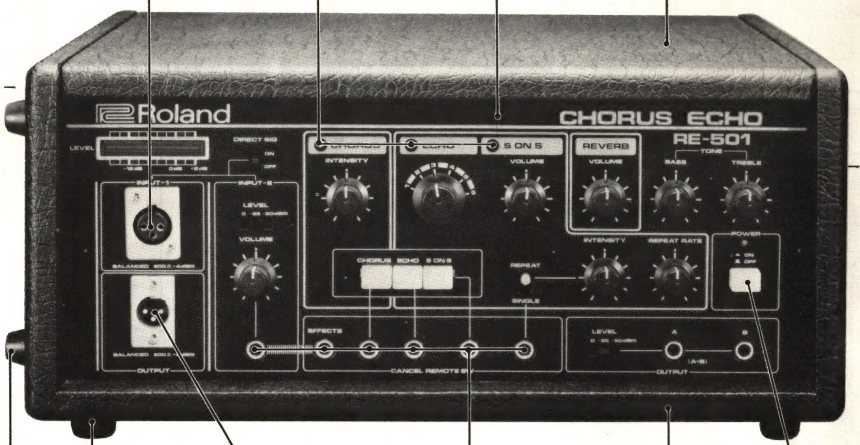

Washer no.42 (121-042)
Decoration screw no.15 (123-015)
Connector NC-3FP or HA16PR-3S (010-263)
LED TLR-124 (019-028)
Panel no.299 (072-299)
Top panel no.19 (086-019)
Handle H-15 (108-004)
Screw 4 x 30 mm black c.sunk

Foot G-9 (111-030)
Foot G-5 (111-021)
Wood screw 2.7x16mm
3.1x20mm
Connector NC-3MP or HA16R3P (010-264)
Jack HLJ-0317-01-100 (009-052) (seeNOTE→)
Cabinet no.135 (081-135)
Button no.85 (016-085)

Switch SRJ-1016 (001-305)
Knob no.103 (016-103)
Pot. EVH6PAP25B15 (026-460)
Switch SSB-02242 (001-182)
LED BAR DISPLAY TLR-401 (019-033)

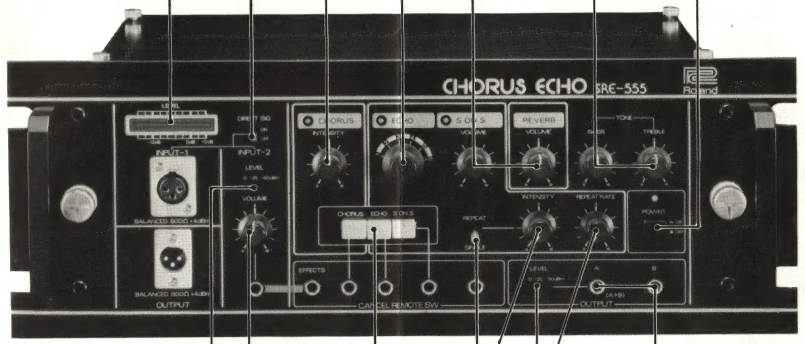

SRE-555 cont'd verte (back side)

Switch SSB-04303 (001-304)
Pot. EVH6PAP25B14 (026-457)
Switch SUF-032A19 (001-306)
Button no.85 (016-085)

Pot. EWKENAP25B15 (027-016)
Pot. EVH6PAP25 B14 (026-457)
Switch ESB-70226 (13129113) 100V
ESB-70271T (13129114) 117V
ESB-70293S (13129115) 220/240V
Button no.9 black (016-009)
Jack HLJ-0307-01-040 or HLJ-1307-01-040 (countersunk opening) (009-053)
Pot. EVH6PAP25A24 (026-447)
Switch SSB-02303(001-205)
Pot. EVH6PAP25B14 (026-457)
Knob no.78 (016-078)
Switch SLR-02239 (001-266)

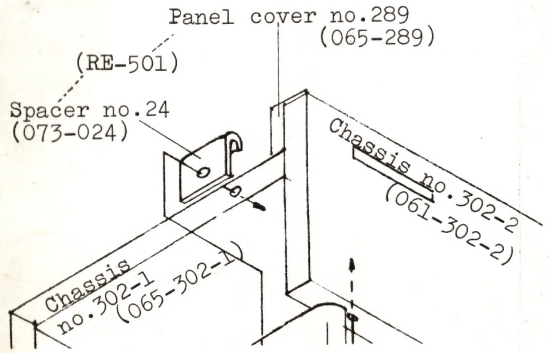

«NOTE »:Jacks on later products HLJ-1317-01-100 countersunk.

SRE-555 PARTS BREAK DOWN

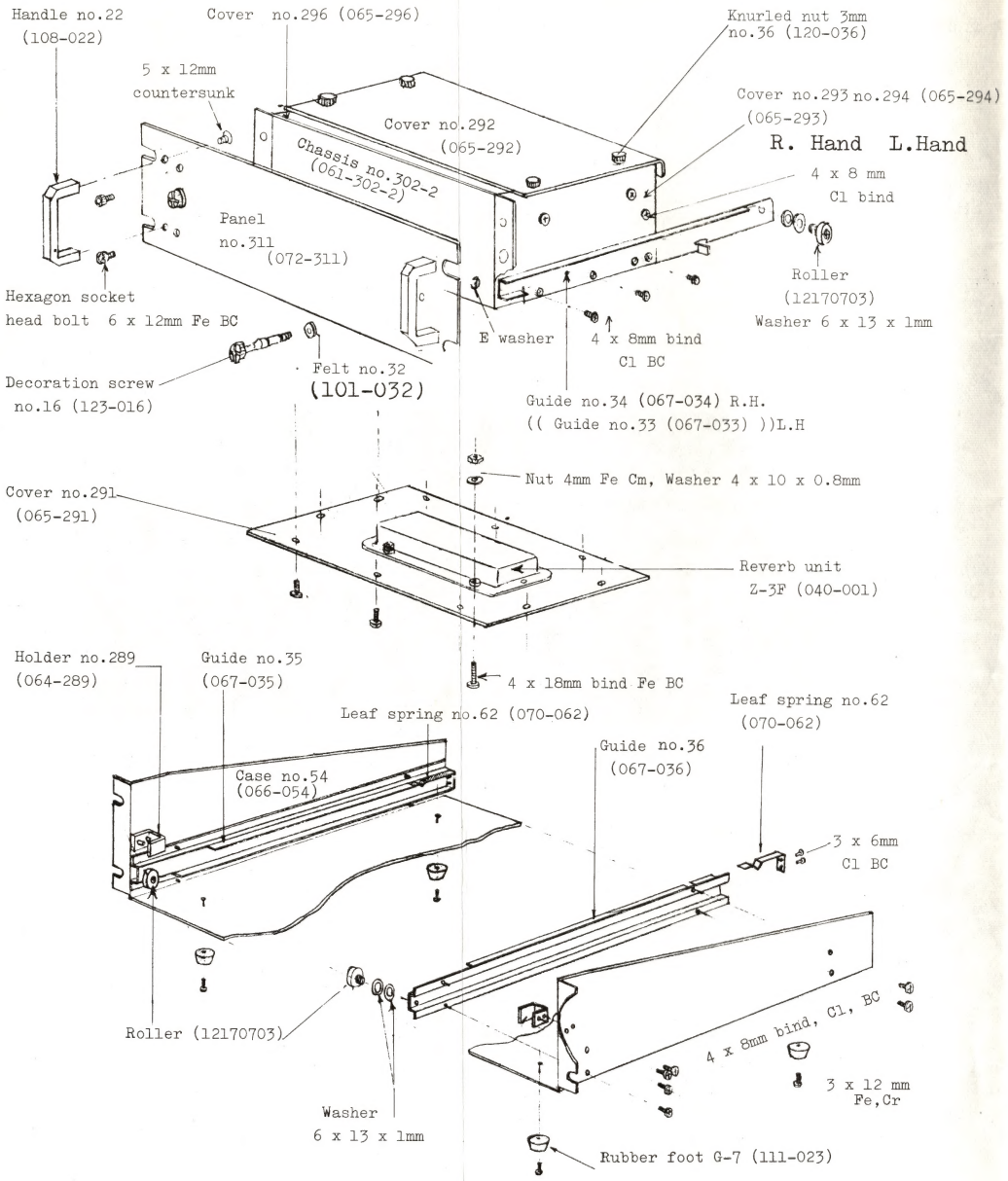

RE-501, SRE-555 CHASSIS-ASSEMBLY ILLUSTRATION

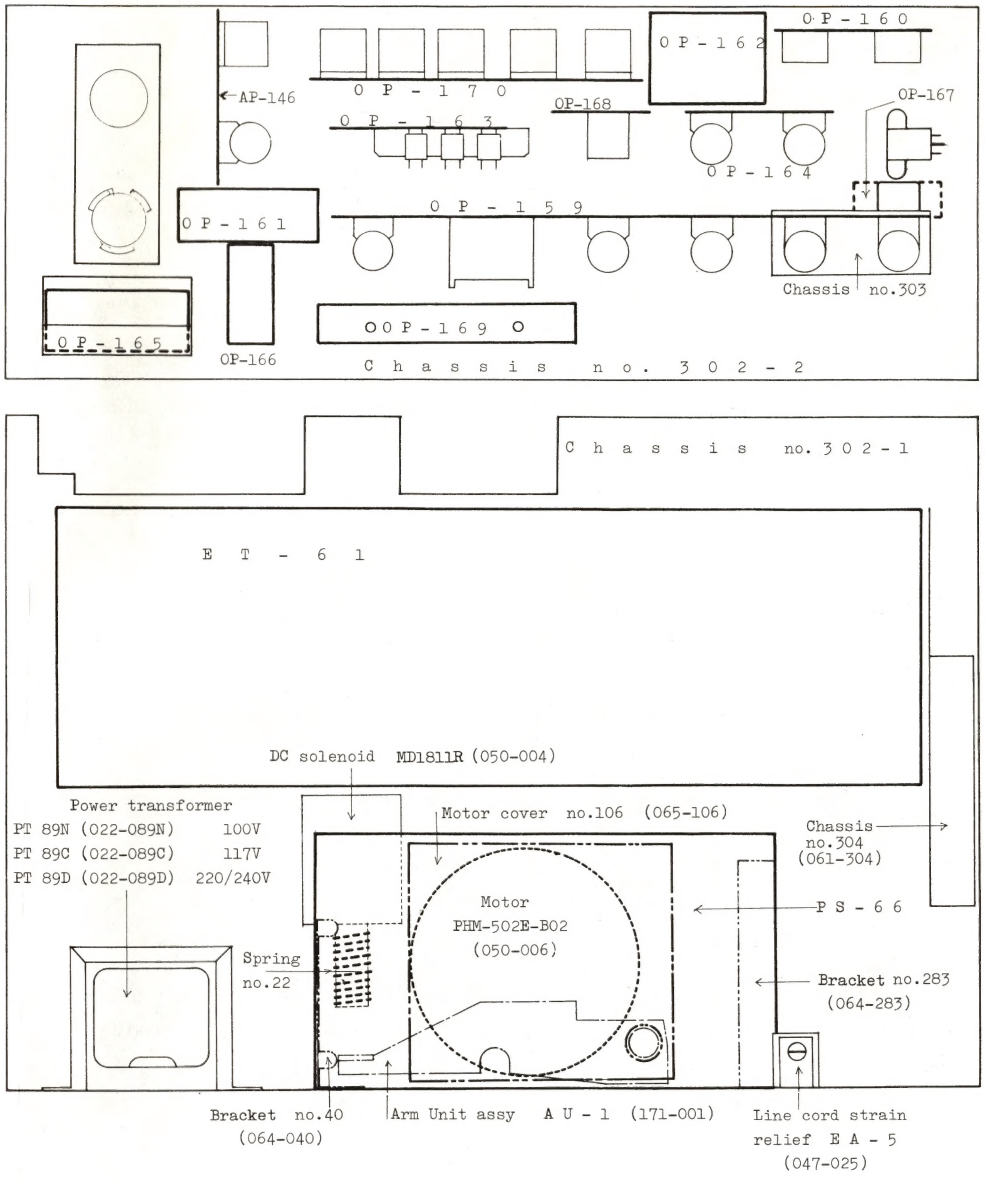

ARM UNIT

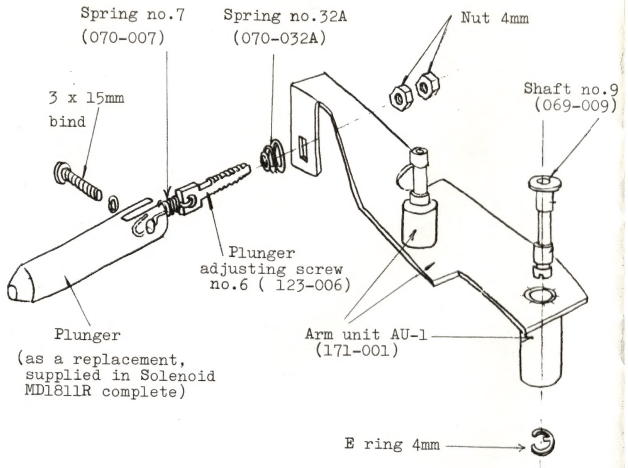

NOTE:

The following list indicates the parts compatible but have different finishes.
Of these, used mainly for RE501/SRE555 are chrome ones.

Name	Finish black	chrome
Frame	no.13	no.7
Frame	no.14	no.8
Frame	no.15	no.9
Frame	no.16	no.10
Plate	no.28	no.11

TAPE PACK

Build Up Parts List

NO.	PART NO.	DESCRIPTION
01	120-036	Face nut no.36
03	092-006	Top cover (acrylic)
04	079-004	Frame no.4
06	079-012	Frame no.12
07	079-013	Frame no.13
08	079-014	Frame no.14
09	079-015	Frame no.15
10	079-016	Frame no.16
11	070-033	Leaf spring no.33
12	101-017	Felt no.17
13	061-063A	Tape chassis no.63A
14	065-113	Roller cover no.113
15	113-004	Bearing no.4
16	063-028	Plate no.28
18	070-018	Spring no.18
19	...	Collar (plastic) 3 x 6mm
20	120-001	Sleeve nut no.1 3 x 10mm
21	Screw	3 x 12mm Bs, Ni
23	Screw	3 x 6mm w/washer (SEMS)
24	Screw	3 x 15mm oval c.sunk
25	Screw	3 x 6mm binding
26	Screw	2.6 x 4mm truss
28	Washer	3 x 8 x 0.3mm plain
29	Washer	3mm dia. spring
30	Nut	3mm dia.
32	Screw	3 x 18mm binding
34	101-026	Felt no.26
36	107-003	Cushion no.3
37	Screw	3 x 15mm black

Exploded Illustration

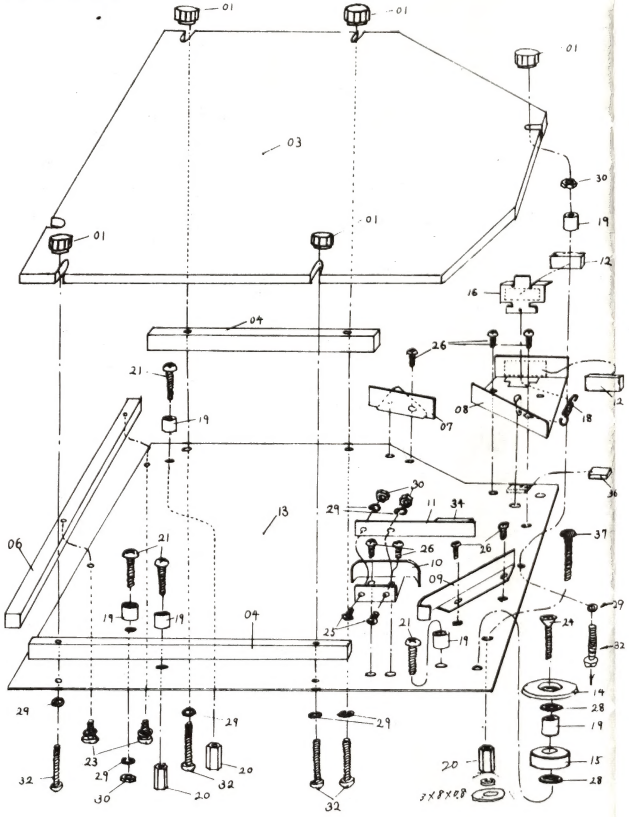

BLOCK DIAGRAM

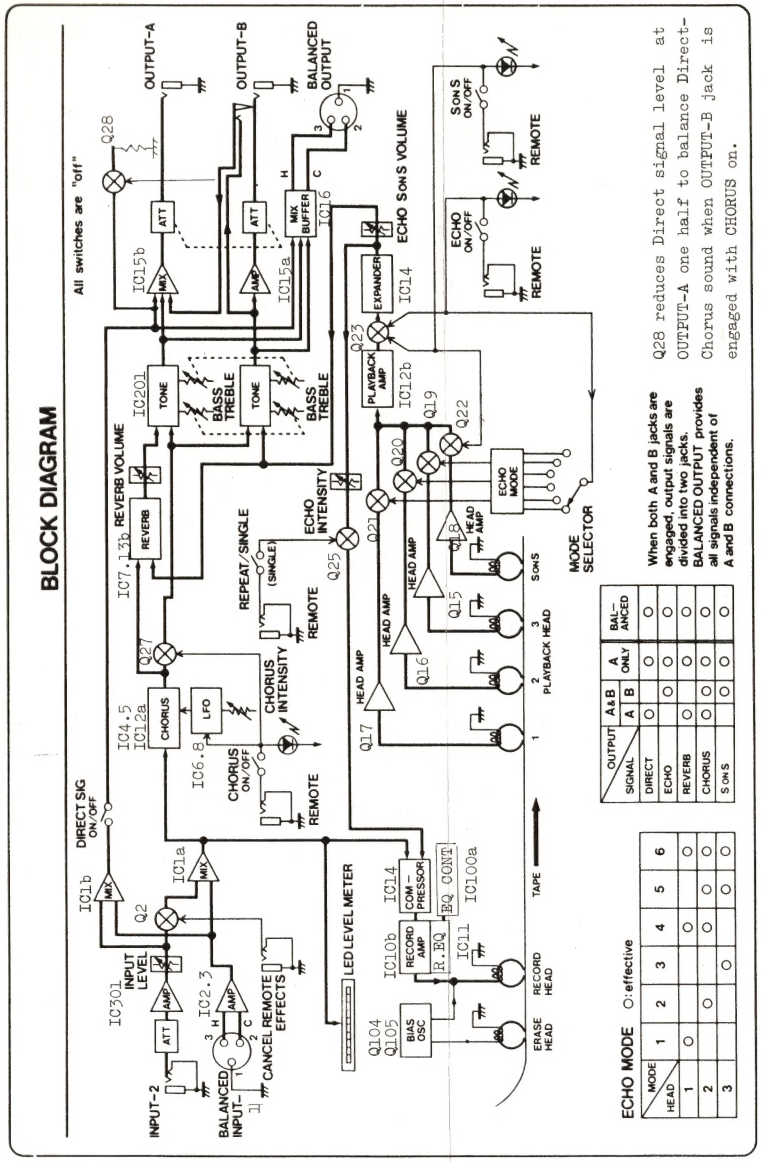

OP-159A(149-159A) (pcb 052-570A)

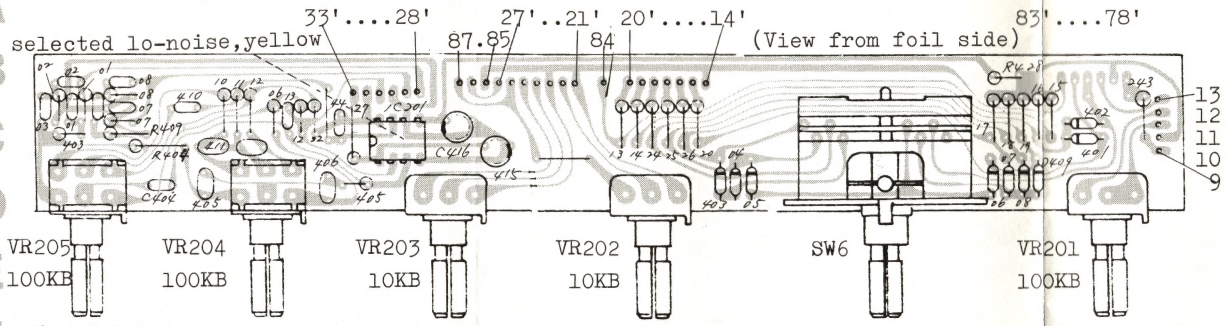

OP-160B(149-160B)

(pcb 052-578B)

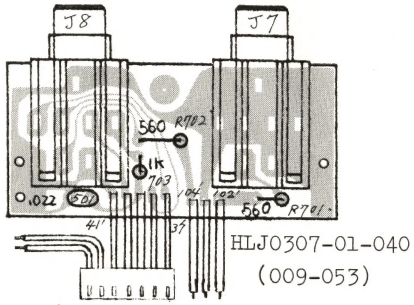

OP-162A(149-162A)

(pcb 052-577A)

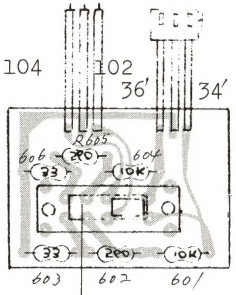

(View from foil side)

OP-163A(149-163A)

(pcb 052-576A)

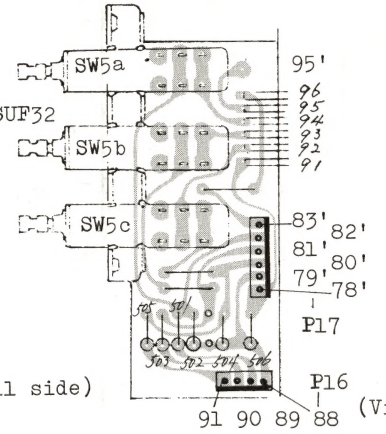

(View from foil side)

OP-164(149-164)

(pcb 052-571)

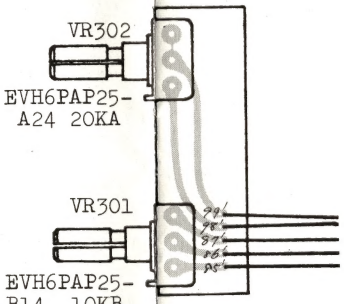

(View from foil side)

OP-165(149-165)

(pcb 052-582)

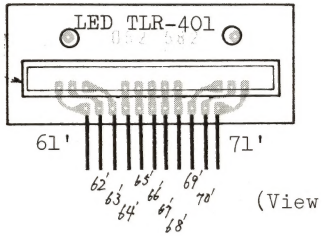

(View from foil side)

OP-166(149-166)

(pcb 052-574)

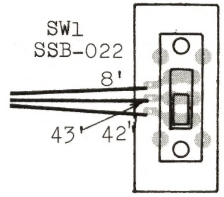

OP-167(149-167)

(pcb 052-580)

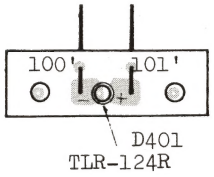

(View from foil side)

OP-168(149-168)

(pcb 052-579)

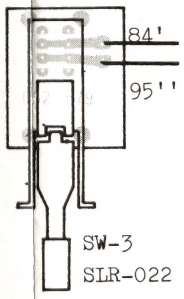

(View from foil side)

OP-169A(149-169A) (pcb 052-581A)

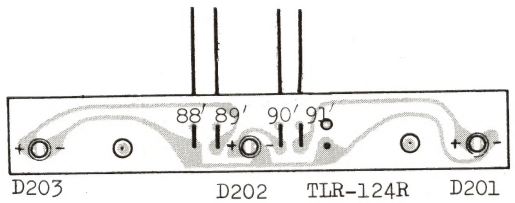

OP-170(149-170)

(pcb 052-572)

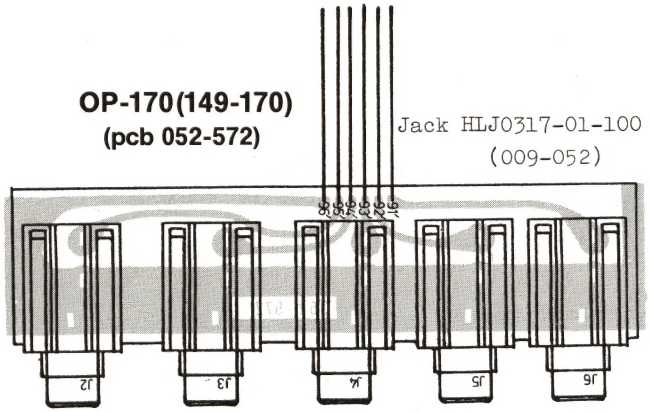

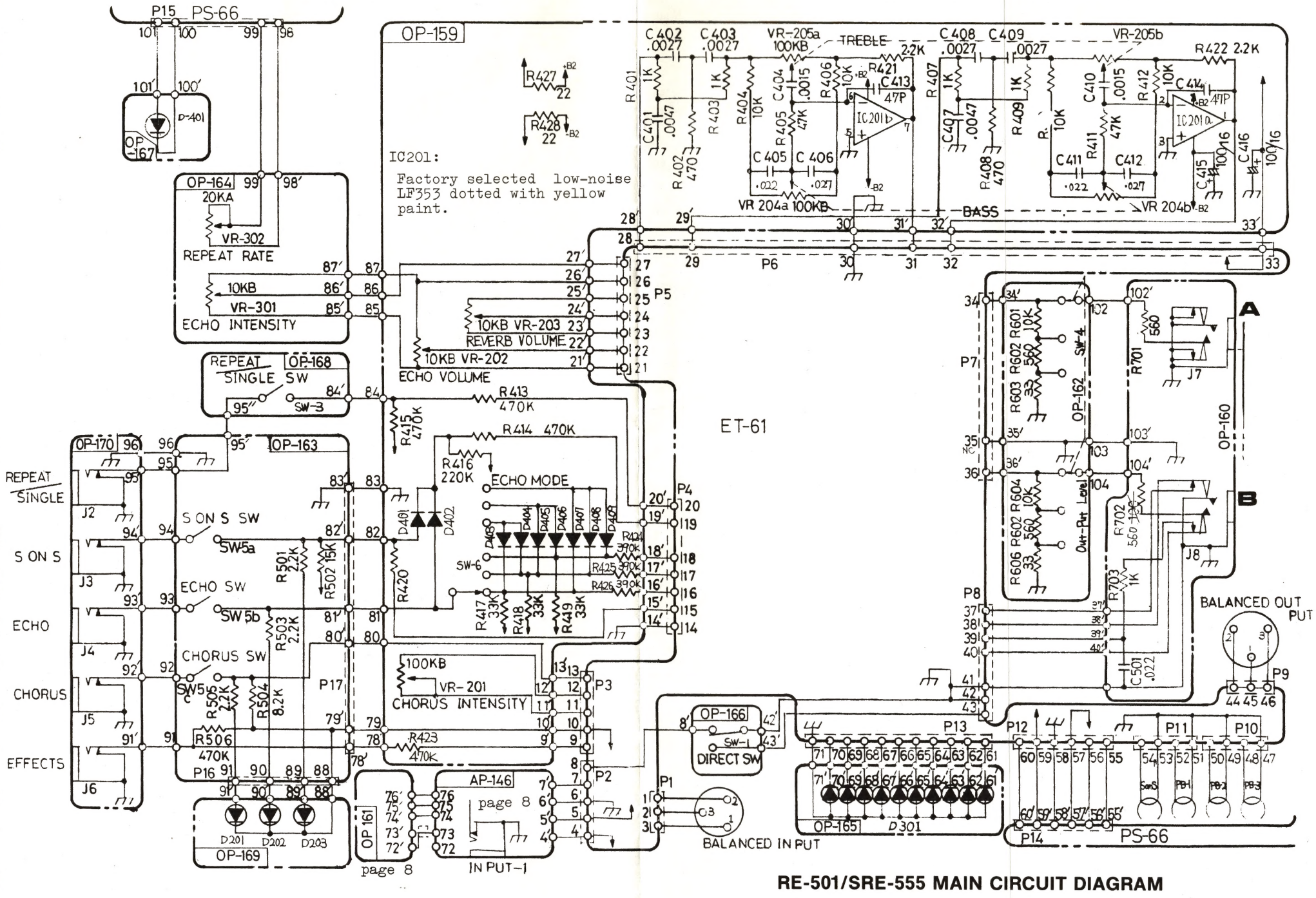

RE-501/SRE-555 MAIN CIRCUIT DIAGRAM

ET-61B
(151-061B)
(pcb 052-567B)

S/N up to
RE501: 951549
SRE555: 950599

Use ET-61C
for replacement

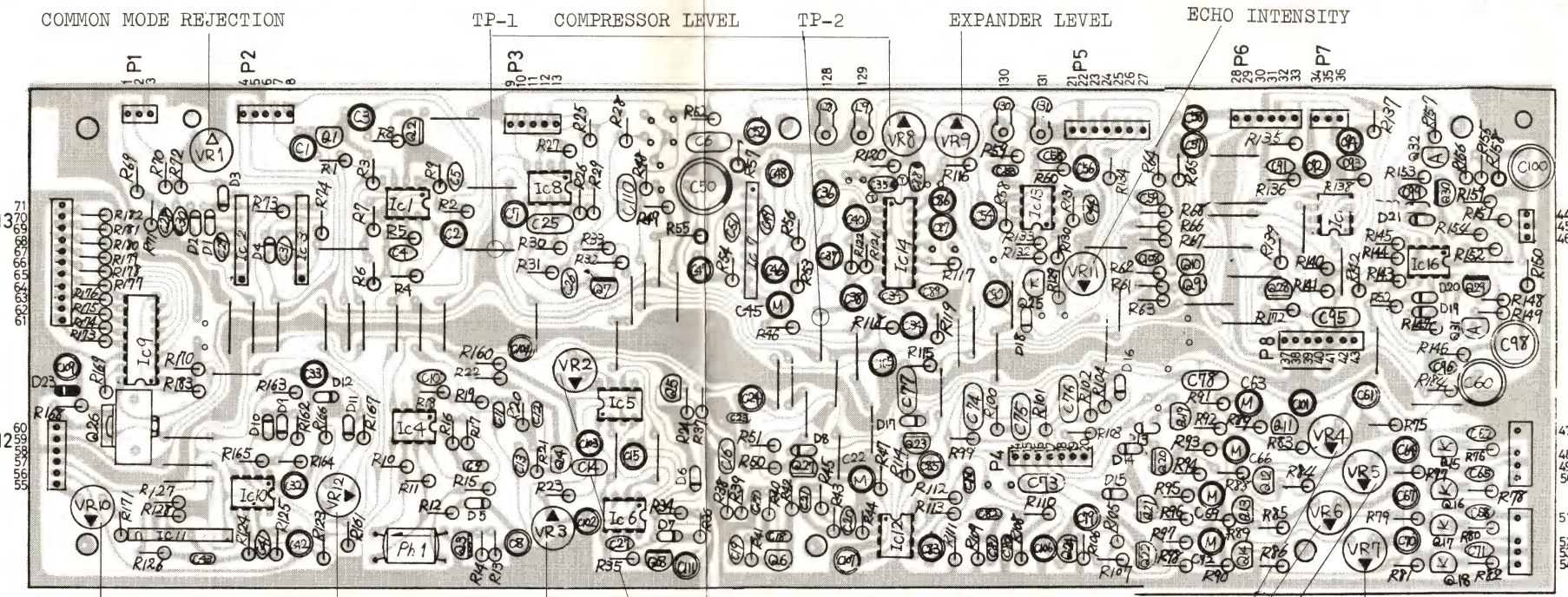

- 2SC732TM-GR
- 2SC1815-Y
- 2SK30ATM-GR
- (K) 2SK68A-K
- (A) 2SA1015-Y
- 1S1588

IC13,15,16 selected low noise, yellow dot

ET-61C
(151-061C)
(pcb 052-567C)

Serial Number with:
RE501: 961550
SRE555: 960600

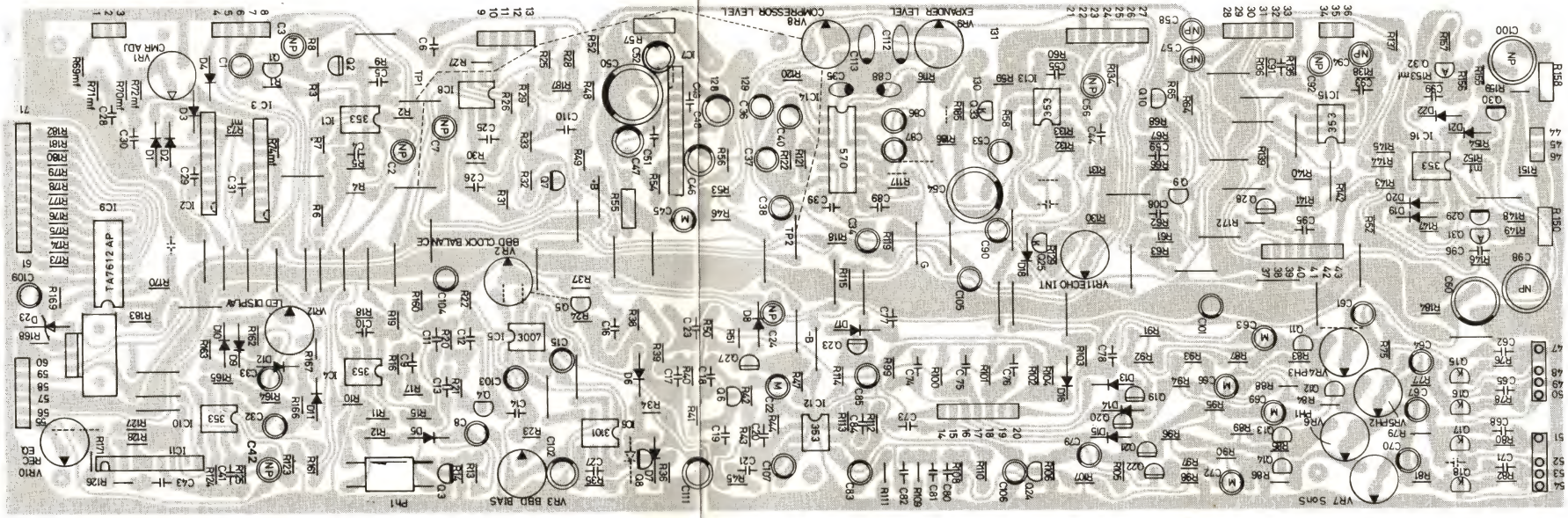

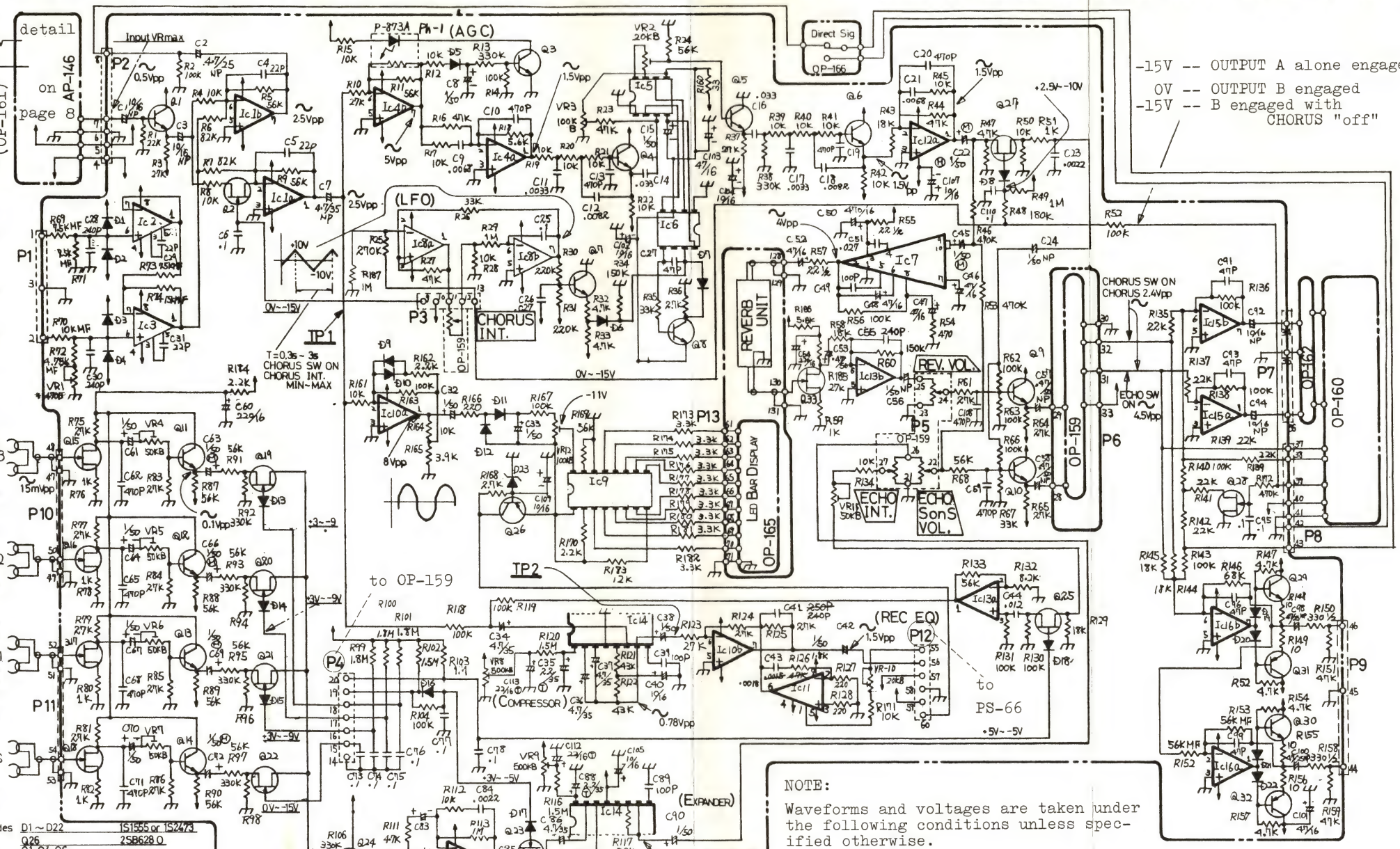

Diodes	D1 ~ D22	1S1555 or 1S2473
Tr	Q26	2SB628 O
	Q1 Q4~Q6 Q9~Q14 Q24	2SC732TM GR
	Q31 Q32	2SA1015 Y
	Q3 Q7 Q8 Q29 Q30	2SC1815 Y
IC	IC1 IC4 IC10 IC12	LF353
	IC13 IC15 IC16	LF353 Low Noise
	IC8	JRC4558
	IC9	TA7612AP
	IC11	BA662 A or B
	IC7	TA7200P
	IC14	NE570N
	IC5 MN3007 IC6 MN3101	
	IC2 IC3	HA1457
FET	Q2 Q19~Q22 Q23 Q27 Q28	2SK30ATM GR
	Q15 Q18 Q25	2SK68A K

ET-61B/C

NOTE:

Waveforms and voltages are taken under the following conditions unless specified otherwise.

VOLUME: FCW / INPUT LEVEL: -50dBm / DIRECT SIG: OFF / EFFECTS MODE: all off / ECHO:1 / S on S VOL: FCW / Echo INTENSITY: FCCW / REPEAT-SINGLE: SINGLE/ REPEAT RATE: FCW / REVERB: FCCW / TONEs: midpoint

FET gate voltages vary with on/off of mate switch. Voltages taken with 10M-ohm/V imp.

AP-146B(141-146B) (pcb 052-573B)

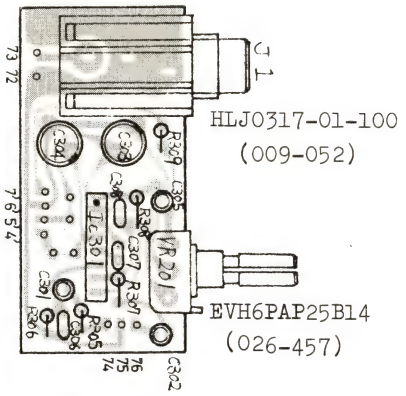

OP-161B(149-161B) (pcb 052-575B)

(View from foil side)

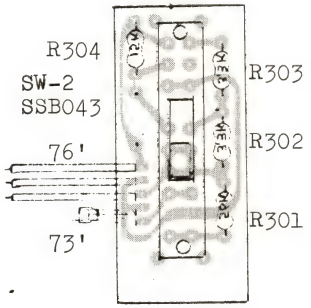

HEAD PIN WIRING

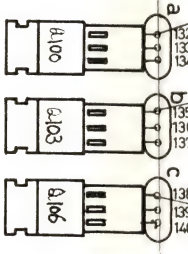

REC. BIAS ADJ.

PS-66(146-066) (pcb 052-569)

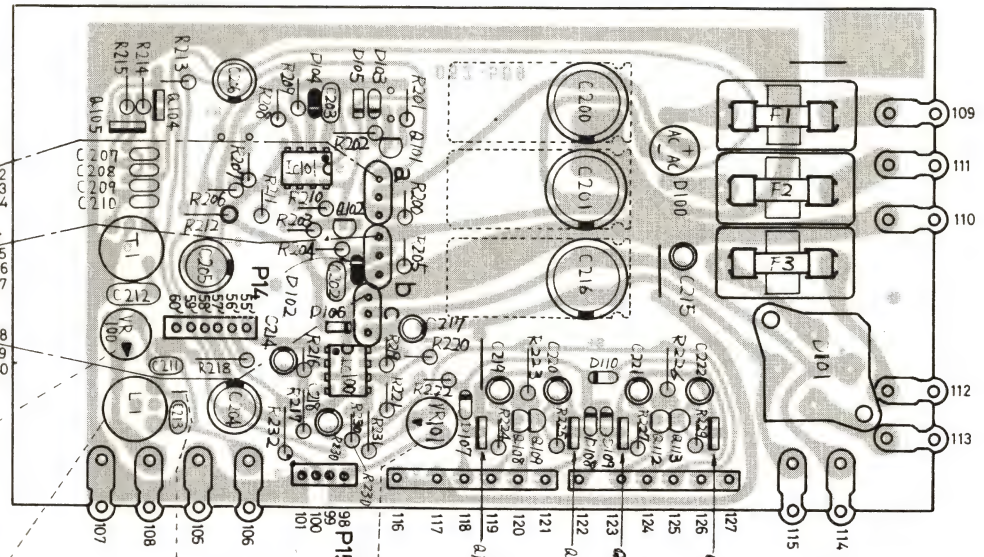

BIAS TRAP TP-3 MOTOR SPEED ADJ CHECK POINTS (collectors)

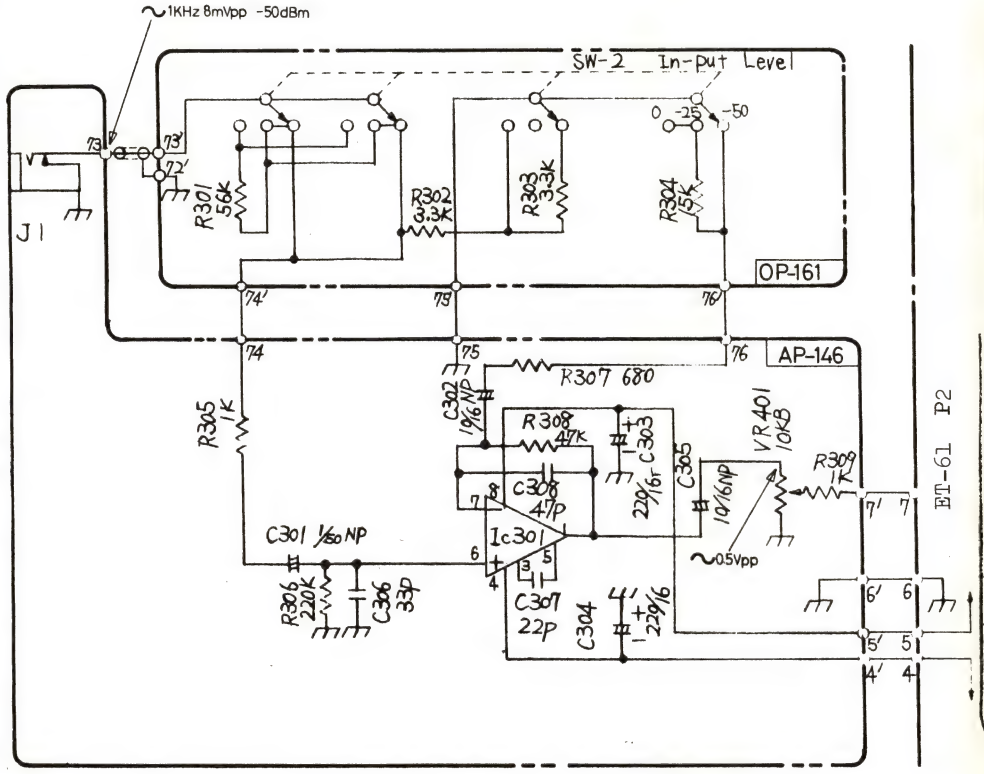

PH

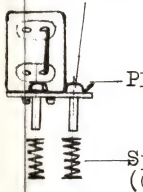

Screw 2.6 x 10mm pan

Platform no.127 (064-127)

Spring no.5 (070-005)

FUSE RATING

	100/117V	220/240V
F1	SGA 1.0A (008-026)	CEE T400mA (008-062)
F2	SGA 1.0A (008-026)	CEE T400mA (008-062)
F3	SGA 2.0A (008-028)	CEE T1.6A (008-069)

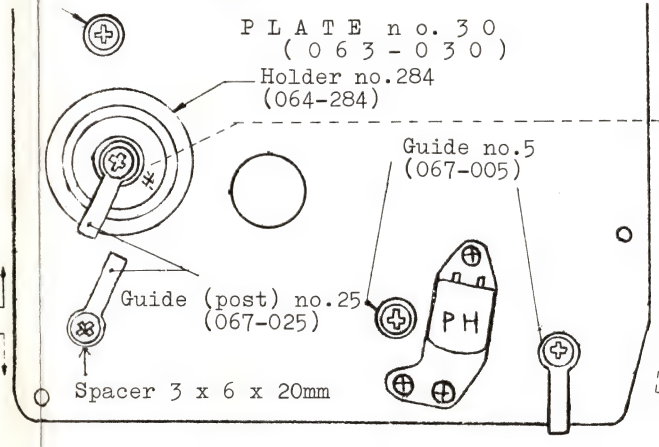

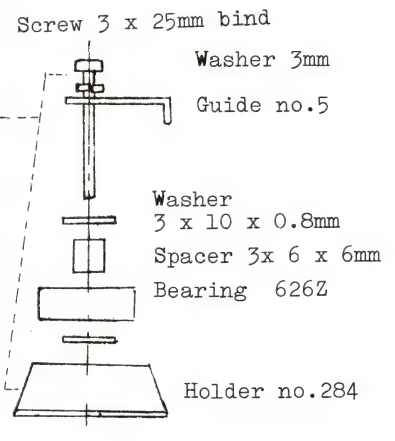

D105, 106 : 1SR-35-200
D107-110 : 1S1555 or 1S2473

Q108, 109, 112, 113 : 2SA733- P or Q
Q101, 102 : 2SC1815-GR

Q103, 106, 100 : 2SD880-Y
Q104-105, 107, 110,111 114 : 2SD571-L

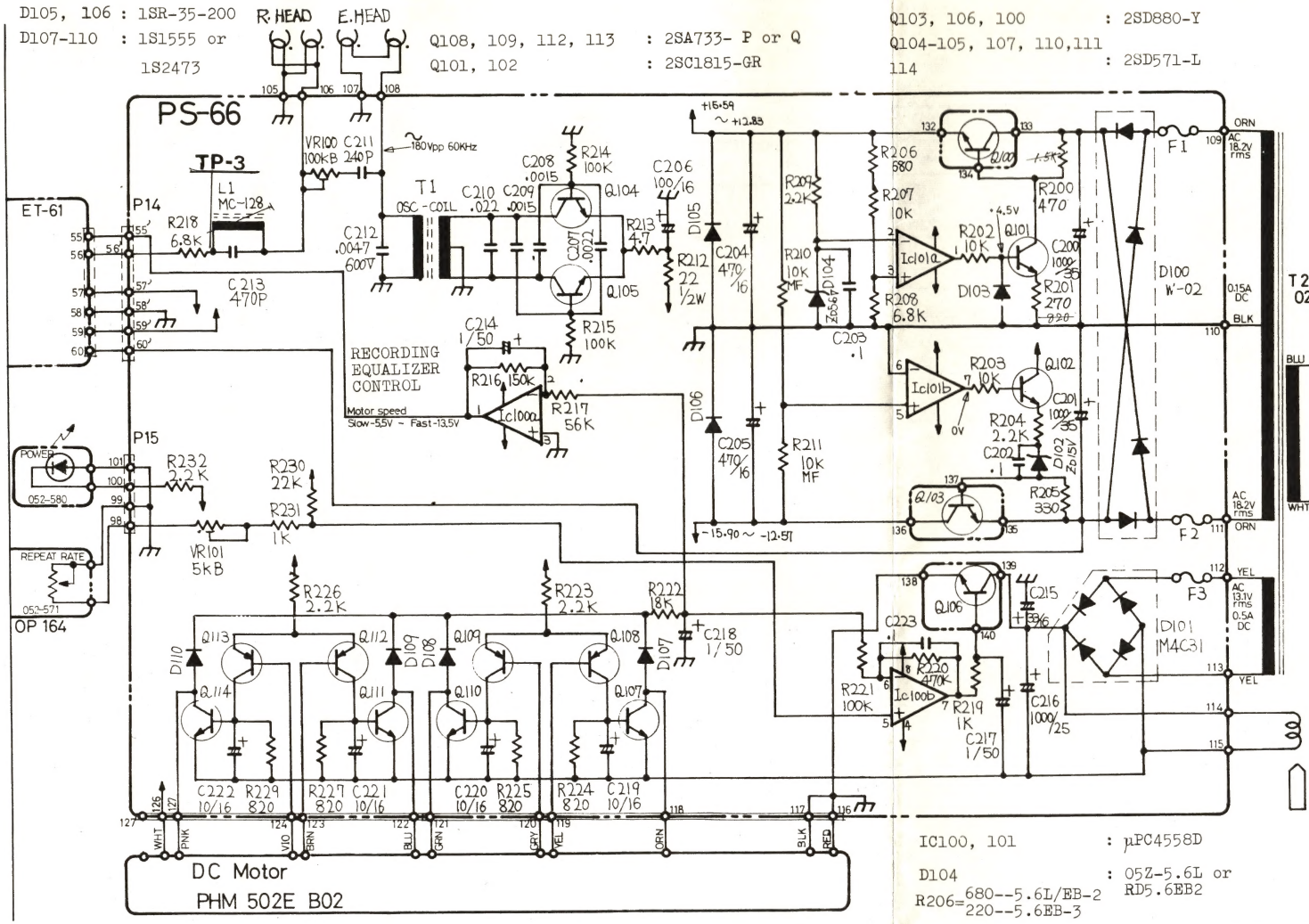

IC100, 101 : μPC4558D

D104 : 05Z-5.6L or RD5.6EB2

R206= 680--5.6L/EB-2
220--5.6EB-3

MOTOR SPEED CONTROL

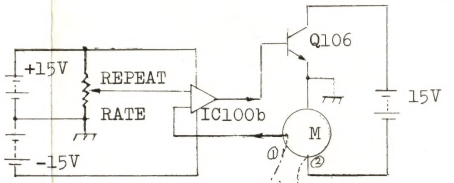

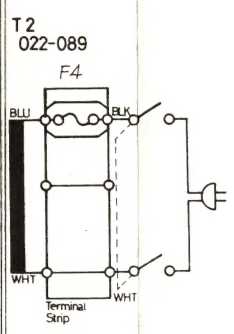

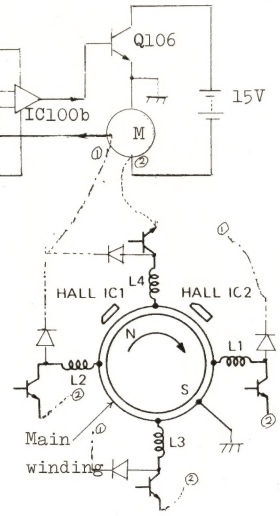

HALL IC MOTOR operates from separate two DC sources.

Switching transistors (Q107, 110, 111, 114), when excited by hall ICs, fire alternately through each L the main winding.
Back e.m.f. of L is rectified through D (D107-110), smoothed and is fed to pin 6 of IC100b. IC100b compares back e.m.f. with reference voltage (from REPEAT RATE CONTROL) and the consequent output of IC100b varies Q106 base bias to control the current flowing into the main winding.

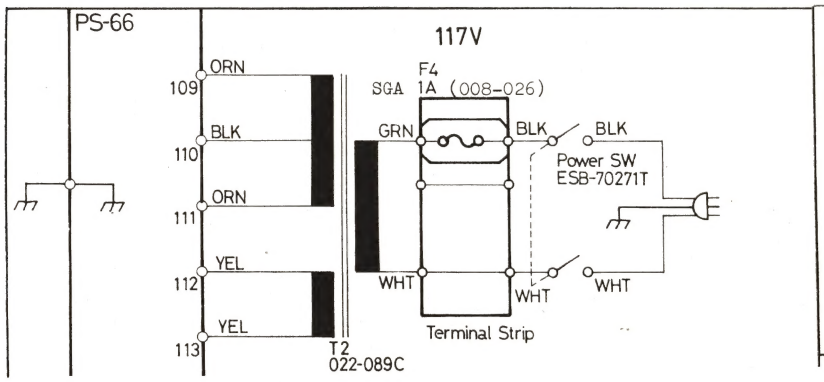

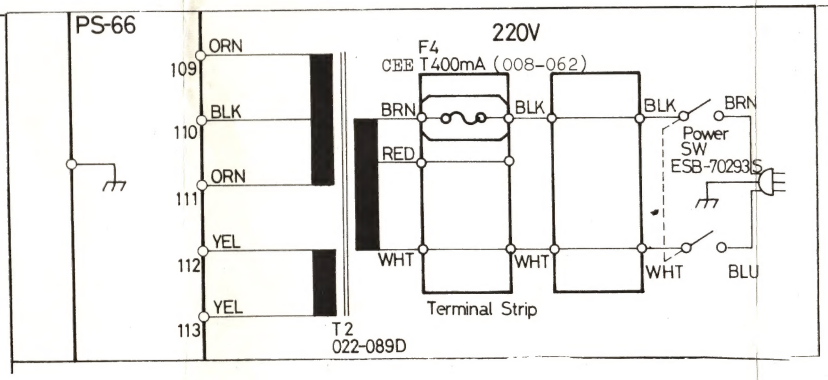

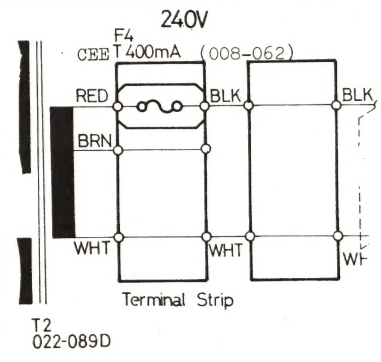

ADJUSTMENT AND CHECKING

1. MECHANICAL ADJUSTMENT

1-1. TAPE CHASSIS POSITION

Position tape chassis 1mm off motor shaft and secure it by tightening two screws at rear.

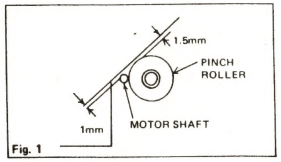

Fig. 1

1-2. TAPE CHASSIS HEIGHT

Position chassis 10.5±0.5mm above main chassis.

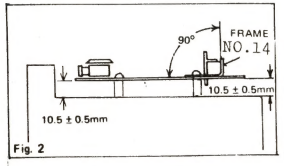

Fig. 2

1-3. LEAF SPRING PRESSURE

Position frame no.16 to have spring contact with bearing at 25-30g.

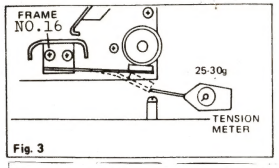

Fig. 3

1-4. FRAMES 13,14 & 15 POSITIONS

While engaging pinch roller with motor shaft, position and fix frames as indicated below.

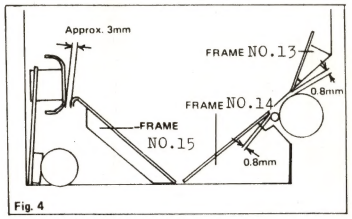

Fig. 4

1-5. PINCH ROLLER PRESSURE

Position solenoid for 1.1-1.25kg pinch roller pressure.

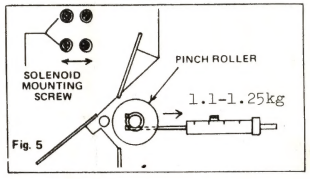

Fig. 5

1-6. HEADS ALIGNMENT

Position each head gap perpendicular to and center on the passing tape by turning alignment screws.

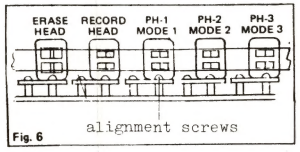

Fig. 6

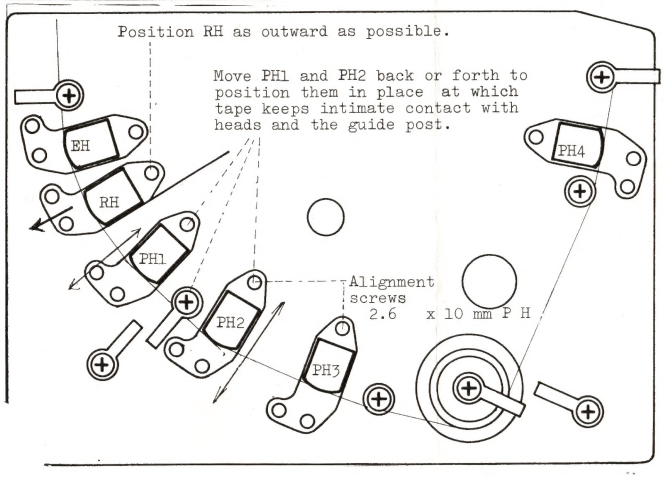

2. ELECTRICAL ADJUSTMENT

2-1. BIAS LEAKAGE TRAP

- PS-66 -

CONTROL PANEL POTENTIOMETER NO.	CHECK POINT	INPUT VOLUME	REPEAT SINGLE SWITCH
TRAP COIL	TP3	MIN	SINGLE

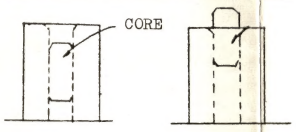

FUNDAMENTAL 2nd HARMONIC

Set VR100 at its midpoint. Connect VTVM or scope to TP-3.

a) Turn L1 core, with appropriate tool, for minimum reading (should not be more than 1V rms).

Continuous turning will dip the meter reading twice -- at fundamental and at 2nd harmonic. Tune L1 to fundamental.

2-2. MOTOR SPEED

- PS-66 -

CONTROL PANEL POTENTIOMETER NO.	CHECK POINT	REPEAT RATE
VR101	Q107 Q110 Q111 Q114 COLLECTOR	MIN

Scope (DC couple, nagative slope, normal) : one of the check points.

a) Set VR101 for the T shown in the figure below.

Time base should be triggered at the lowest negative peaks.

T should not be longer than 23ms with REPEAT RATE set at FCW position when the machine is operating on the rated line voltage.

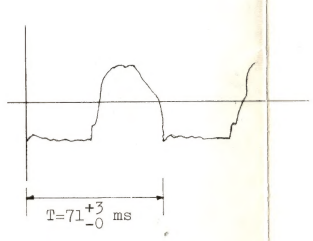

2-3. LED BAR DISPALY

- ET-61 -

CONTROL PANEL POTENTIOMETER NO.	CHECK POINT	INPUT VOLUME	INPUT LEVEL SWITCH
VR12	LED BAR DISPLAY	MAX	0dB

Input signal: 1kHz, sine wave, +2dBm, into INPUT-2 jack.

a) Turn VR12 FCW; then reverse it slowly until BAR displays +2dB.

b) Make sure that LEDs read -12dB under the following settings:

INPUT SIGNAL	INPUT LEVEL SWITCH
INPUT-1 -8dBm	
INPUT-2 -12dBm	0dB
-37dBm	-25dB
-62dBm	-50dBm

2-4. COMMON MODE REJECTION

CONTROL PANEL POTENTIOMETER NO.	CHECK POINT	INPUT VOLUME	INPUT LEVEL SWITCH	DIRECT SIGNAL SWITCH
VR1	OUT PUT A	MIN	—	ON

EFFECT MODE SWITCH CHORUS	ECHO	S on S	ECHO S on S VOLUME	REVERB VOLUME	TONE BASS	TREBLE	OUTPUT LEVEL SWITCH
OFF	OFF	OFF	MIN	MIN	MIN	MIN	0dBm

Input signal: 1kHz, sine wave, +4dBm into INPUT-1 jack with its pins 2 and 3 joined.

Oscilloscope: OUTPUT-A.

a) Adjust VR1 for minimum 1kHz signal output.

2-5. COMPRESSOR LEVEL

CONTROL PANEL POTENTIOMETER NO.	CHECK POINT	INPUT VOLUME	INPUT LEVEL SWITCH	REPEAT SINGLE SWITCH
VR8	TP 1 TP 2	MAX	0dB	SINGLE

Input signal: 1kHz, sine wave, INPUT-2.

a) Set audio generator for -40±0.1dBm reading on millivoltmeter at TP-1.

b) Adjust VR8 for -34.5dBm reading at TP-2.

Distributed meter lead capacitance should be less than 100pF.

2-6. HEAD ALIGNMENT

The following adjustments must be done only after completion of MECHANICAL ADJUSTMENTS.

CONTROL PANEL POTENTIOMETER NO.	CHECK POINT	INPUT VOLUME	INPUT LEVEL SWITCH	DIRECT SIGNAL SWITCH	EFFECT MODE SWITCH CHORUS	ECHO	S on S
———	OUT PUT A	MAX	—	OFF	OFF	ON	OFF
						OFF	ON

ECHO S on S VOLUME	ECHO S on S INTENSITY	REPEAT RATE	REVERB VOLUME	TONE BASS	TREBLE	OUTPUT LEVEL SWITCH	REPEAT SINGLE SWITCH
MAX	—	CENTER	MIN	CENTER	CENTER	—	SINGLE

2-6-1. Fine Alignment

Take visual head examination for misalignment referring to the figures below. Readjust as necessary.

(a) TANGENCY

The faces of the head cores must be simultaneously tangent to the same degree with the tape.

(b) HEIGHT

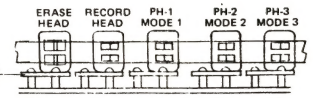

Every gap-width dimension is centered on the same track location.

(c) AZIMUTH

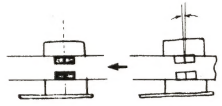

Width dimension of the head gap is a precise 90-degree angle to the tape edge.

(d) TILT

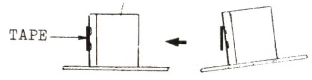

The tape must contact with head surface precisely in parallel.

2-6-2. Playback heads

Input signal: 1kHz, square, for 0dB LED display.
Panel controls setting: as shown at the left.

a) With ECHO MODE selected to corresponding head, adjust playback head for the following:

(1) Waveform slope is straightened.
(2) Leading edge is as perpendicular to base line as possible or has shortest rise time.

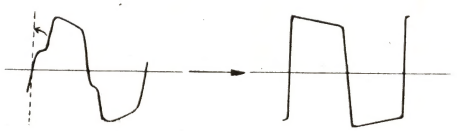

b) Readjusting TANGENCY described in(a) of 2-6-1 at this step may prove effective to obtain waveform stability.

Output level differences among playback heads are to be compensated for in later section.

2-7. EXPANDER

CONTROL PANEL POTENTIOMETER NO.	CHECK POINT	INPUT VOLUME	INPUT LEVEL SWITCH	DIRECT SIGNAL SWITCH	EFFECT MODE SWITCH CHORUS	ECHO	S on S
VR6 VR9 VR100	OUT PUT A	MAX	—	OFF	OFF	ON	OFF

ECHO S on S VOLUME	ECHO S on S INTENSITY	REPEAT RATE	REVERB VOLUME	TONE BASS	TONE TREBLE	OUTPUT LEVEL SWITCH	REPEAT SINGLE SWITCH
MAX	—	—	MIN	CENTER	CENTER	0dBm	SINGLE

Input signal:1kHz,sine wave for 0dB reading on LED bar.
ECHO MODE: 1

a) Set VR100 on PS-66 for maximum meter reading at OUTPUT A.
b) Set VR6 for 0dBm±3dBm reading on the meter.
c) Decrease audio generator output by 40dBm.

d) Adjust VR9 so that the meter reads 40±0.5dB lower than that at step b.

As can be seen from the figure below, VR9,when turned, will deviate input-output curve at point which preadjusted by VR6.
d) Repeat steps b-d for specified results.

This input-output curve has pronounced effect on smoothness of level decrease ratio of multiple echo sounds and residual noise. The curve should be as linear as possible.

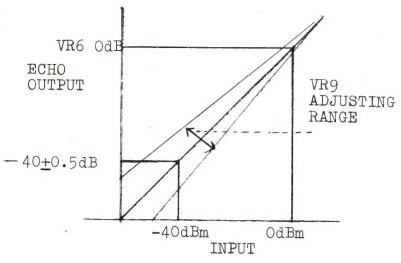

2-8. RECORDING BIAS

CONTROL PANEL POTENTIOMETER NO.	CHECK POINT	INPUT VOLUME	INPUT LEVEL SWITCH	DIRECT SIGNAL SWITCH	EFFECT MODE SWITCH CHORUS	ECHO	S on S
VR 100	OUT PUT A	MAX	0dB	OFF	OFF	ON	OFF

ECHO S on S VOLUME	ECHO S on S INTENSITY	REPEAT RATE	REVERB VOLUME	TONE BASS	TONE TREBLE	OUTPUT LEVEL SWITCH	REPEAT SINGLE SWITCH
MAX	—	CENTER	MIN	CENTER	CENTER	—	SINGLE

Input signal: 1kHz, sine wave, 0dBm to INPUT-2.

a) Turn VR100 FCW. Reversing it gradually, find the point which furnishes the highest output.
b) Set VR100 for ±1dB of the peak value.

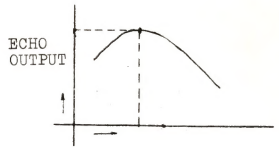

CW -- VR100 -- CCW

2-9. PLAYBACK EQUALIZER

CONTROL PANEL POTENTIOMETER NO.	CHECK POINT	INPUT VOLUME	INPUT LEVEL SWITCH	DIRECT SIGNAL SWITCH
VR6 VR 10	OUT PUT A	MAX	0dB	OFF

EFFECT MODE SWITCH CHORUS	ECHO	S on S	ECHO S on S VOLUME	ECHO S on S INTENSITY
OFF	ON	OFF	MAX	—

REPEAT RATE	REVERB VOLUME	TONE BASS	TONE TREBLE	OUTPUT LEVEL SWITCH	REPEAT SINGLE SWITCH
CENTER	MIN	CENTER	CENTER	0dBm	SINGLE

Input signal: 1kHz, sine wave, 0dBm to INPUT-2 jack.

ECHO MODE: 1

a) Adjust VR6 for 0dBm reading at OUTPUT A.
b) Reset audio generator for 10kHz, 0dBm.
c) Set VR10 for -15dBm +1.5dBm -3dBm reading at OUTPUT A.

If VR10 fails to produce this output, readjust VR100 together with VR10 at 10kHz.

2-10. PLAYBACK HEAD SENSITIVITY

CONTROL PANEL POTENTIOMETER NO.	CHECK POINT	INPUT VOLUME	INPUT LEVEL SWITCH	DIRECT SIGNAL SWITCH	EFFECT MODE SWITCH CHORUS	ECHO	S on S
VR4 VR5 VR6 VR7	OUT PUT A	MAX	0dB	OFF	OFF	ON / OFF	OFF / ON

ECHO S on S VOLUME	ECHO S on S INTENSITY	REPEAT RATE	REVERB VOLUME	TONE BASS	TONE TREBLE	OUTPUT LEVEL SWITCH	REPEAT SINGLE SWITCH
MAX	—	MAX	MIN	CENTER	CENTER	0dBm	SINGLE

Input signal: 1kHz, sine wave, 0dBm into INPUT 2 jack.

To obtain equal echo outputs in sound level,

a) adjust each trimmer potentiometer for 0dBm +0.5dB -0dB reading at OUTPUT A jack.

ECHO MODE	TRIMMERPOT
1	VR4
2	VR5
3	VR6
S on S	VR7

2-11. ECHO INTENSITY

CONTROL PANEL POTENTIOMETER NO.	CHECK POINT	INPUT VOLUME	INPUT LEVEL SWITCH	DIRECT SIGNAL SWITCH	EFFECT MODE SWITCH CHORUS	ECHO	S on S
VR 11	OUT PUT A	MAX	0dB	OFF	OFF	ON	OFF

ECHO S on S VOLUME	ECHO S on S INTENSITY	REPEAT RATE	REVERB VOLUME	TONE BASS	TONE TREBLE	OUTPUT LEVEL SWITCH	REPEAT SINGLE SWITCH
MAX		MAX	MIN	—	—	—	REPEAT

Input signal: 1kHz, sine wave, 0dBm into INPUT 2 jack.

a) Rotate ECHO/S on S knob to 10th point from FCCW.

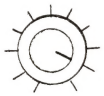

b) Feed the signal for a short period (0.5-2s).
Adjust VR11 for finfinite echo repetition or oscillation.

c) Reverse the knob to 9th point.
Echo sound should die away gradually.

2-12. BBD BIAS (CHORUS)

CONTROL PANEL POTENTIOMETER NO.	CHECK POINT	INPUT VOLUME	INPUT LEVEL SWITCH	DIRECT SIGNAL SWITCH	CHORUS INTENSITY
VR 2 VR3	OUT PUT A	MAX	-25dBm	OFF	MIN

EFFECT MODE SWITCH CHORUS	ECHO	S on S	REVERB VOLUME	TONE BASS	TONE TREBLE	OUTPUT LEVEL SWITCH	REPEAT SINGLE SWITCH
ON	OFF	OFF	MIN	CENTER	CENTER	—	—

Input signal: 1kHz, rectangular, 0.3Vp-p into INPUT 2 jack.

a) Rotate VR2 to its midpoint.
b) Set VR3 for chorus output waveform symmetrical to the base line of scope.

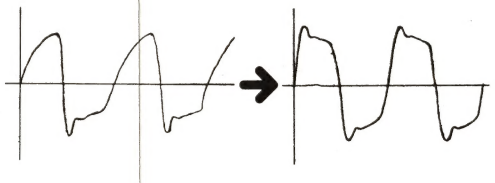

2-13. CLOCK COMPONENT REDUCTION

CONTROL PANEL POTENTIOMETER NO.	CHECK POINT	INPUT VOLUME	INPUT LEVEL SWITCH	DIRECT SIGNAL SWITCH	CHORUS INTENSITY	EFFECT CHORUS
VR 2 VR3	Q5 BASE	MIN	—	—	—	OFF

Scope's distributed lead capacitance should not be more than 47pF.

a) Adjust VR2 for minimum discrepancy in amplitude between clock pulses on the base line.
b) Adjustments 2-12 and 2-13 are interrelated.
Repeat both adjustments for the best result.

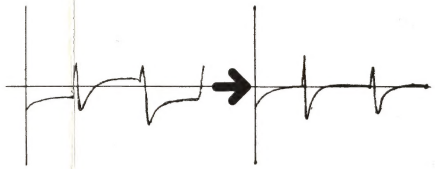

PARTS LIST

CABINET. PANEL

RE501

081-135	Cabinet	no.135
086-019	Cabinet (upper)	no.19
108-004	Handle	H-15
111-030	Rubber foot	G-9
111-021	Rubber foot	G-5
115-002	Hinge	no.2
072-299	Panel (front)	no.299
065-289	Panel cover grey, back of front panel	no.289
073-024	Spacer chassis-cabinet, side	no.24

SRE555

072-311	Panel (front)	no.311
065-292	Cover (top panel)	no.292
065-294	Cover (left hand)	no.294
065-293	Cover (right hand)	no.293
065-291	Cover (bottom)	no.291
065-296	Cover back of front panel	no.296
108-022	Handle	no.22
067-034	Guide no.34 right hand	
067-033	Guide no.33 left hand	
067-035	Guide no.35 rail L.hand	
067-036	Guide no.36 rail R.hand	
066-054	Case no.54	outer
064-289	Holder no.289	
070-062	Leaf spring	no.62
12170703	Roller no.12170703	
111-023	Rubber foot	G-7
123-016	Decoration screw	no.16

*ref.p-2 for detail

SWITCH. KNOB

Switch

13129113	ESB70226	power 100V
13129114	ESB70271T	power 117V
13129115	ESB70293S	power 220/240V
001-305	SRJ-1016	rotary
001-266	SLR-02239	lever
001-304	SSB-04303	slide INPUT
001-205	SSB-02303	slide OUTPUT
001-182	SSB-02242	slide DIRECT
001-306	SUF-32A19	push

Knob

016-103	No.103	rotary switch
016-078	No.78	pots.
016-085	Button	no.85 white
016-009	Button	no.9 blk(SRE555)

SEMICONDUCTOR

Transistor

017-139	2SD880-Y	
017-077	2SB628-R	
017-258	2SD571-L	
017-103	2SC732TM-GR	
017-024	2SA733- P or Q	
017-106	2SC1815- GR or Y	
017-116	2SA1015-Y	
017-081	2SK68A-K	FET
017-014	2SK30ATM-GR	FET

Diode

018-014	1S2473	
018-082	W-02	
018-093	M4C31	
018-101	1SR-35-200	
15019654	RD16EB-2	zener
15019525	RD5.6B-2	zener
	or 05Z5.6L	
	(RD5.6B-3 can be a replacement with the resistor value changed, see PS-66 circuit diagram.)	
019-028	TLR-124	red LED
019-033	TLR-401	10-segment LED BAR
019-011	P873A	red or white photocoupler

IC

020-028	TA-7200P	
020-208	LF353N	
020-071	JRC- or μPC-	4558D
020-160	BA-662-	A or B
020-213	MN3007	BBD
020-224	MN3101	BBD driver
020-226	TA7612AP	LED BAR driver
020-098	NE570N	compander
020-080	HA1457	pre amp
020-208S	LF353N selected,yellow	

POTENTIOMETER

026-457	EVH6PAP25B14	
026-460	EVH6PAP25B15	
027-016	EWKENAP25B15	dual, ganged
026-447	EVH6PAP25A24	
028-003	EVTR4AA 5K	trimmer
028-004	EVTR4AA 10K	trimmer
028-005	EVTR4AA 20K	trimmer
028-006	EVTR4AA 50K	trimmer
028-007	EVTR4AA 100K	trimmer
13299547	CR19R 220	trimmer
030-487	CR19R 470	trimmer

SOCKET. CONNECTOR

009-052	HLJ1317-01-100	
	or HLJ0317-01-100	
009-053	HLJ1317-01-040	
	or HLJ0317-01-040	
	*Type 1317 countersunk opening, used on later products.	
010-263	NC-3FP or HA16PR-3S female	
010-264	NC-3MP or HA16R3P male	

PRINTED CIRCUIT BOARD

141-146B	AP-146B	(pcb 052-573B)
146-066	PS-66	(pcb 052-569)
149-159A	OP-159A	(pcb 052-570A)
149-160B	OP-160B	(pcb 052-578B)
149-161B	OP-161B	(pcb 052-575B)
149-162A	OP-162A	(pcb 052-577A)
149-163A	OP-163A	(pcb 052-576A)
149-164	OP-164	(pcb 052-571)
149-165	OP-165	(pcb 052-582)
149-166	OP-166	(pcb 052-574)
149-167	OP-167	(pcb 052-580)
149-168	OP-168	(pcb 052-579)
149-169A	OP-169A	(pcb 052-581A)
149-170	OP-170	(pcb 052-572)
151-061C	ET-61C	(pcb 052-567C)
	* direct replacement for ET-61 A/B	

TRANSFORMER. COIL

022-095	Osc coil	MC126-2141
022-045	Trap coil	MC-128
022-089N	Transformer	PT89N 100V
022-089C	PT89C	117V
022-089D	PT89D	220/240V

FUSE. FUSE HOLDER

008-026	SGA 1.0A Fl,2,4	100/117V
008-028	SGA 2.0A F3	100/117V
008-062	CEE T400mA Fl,2,4	220/240V
008-069	CEE T1.6A F3	220/240V
012-003	Clip TF-758	sec.
012-018	Clip X-N1153	prim.

SOME PARTS DESIGNATED IN NEW NUMBERINGS

HEAD. DRIVINGS

049-003	Record head	R-280MR
049-004	Playback head	R-280MP
049-001	Erase head	AE-28
065-118	Shield no.118	R.Head
064-127	Platform	no.127
070-005	Spring no.5	alignment
063-030	Plate no.30	platform mount
065-286	Cover no.286	above heads
067-005	Tape guide no.5	(post)
067-025	Guide no.25	L shape
112-001	Pinch roller	no.1
068-006	Cover no.6	pinch roller
101-001	Shaft no.1	pinch roller
064-284	Holder no.284 (guide bearing base)	
113-004	Bearing 626ZZC2 (guide bearing)	
	*See page 8 for detail.	
050-006	Motor	PHM-502E-B02
065-106	Cover no.106	motor
120-037	Nut no.37	motor mount

*PARTS ON TAPE CHASSIS PAGE 3

Arm. Solenoid

171-001	Arm unit assy	AU-1
069-009	Shaft no.9	AU-1 mount
050-004	DC solenoid	MD1811R
070-032A	Spring no.32A	
070-007	Spring no.7	
070-022	Spring no.22	
123-006	Screw no.6 plunger adjust	
	* detail ref. pp.2-3.	
040-001	Reverb unit	Z-3F
064-040	Bracket no.40	PS-66 mount
064-283	Bracket no.283	PS-66 mount
064-033	PCB holder (rocker rivet)	LCB-4N

CHASSIS

061-302-1	No.302-1	main
061-302-2	No.302-2	front
061-303	No.303	pot(tone) shield
061-304	No.304	head amp shield